Lug Dimensions for STM, STF, SMC and SHB Series

The Lug dimensions suitable for style : B, K, U, C, UF, CF, R, G, T, TF, E ,N, D and L. Chose the correct styles according to your assemble way.

The code includes the alternative symbol, & and #. You can change the symbol according to your selections.

Ordering code: STM - 1200 - 0.47 - & P #

P2: the distance between lugs.

Lug style: B. K. U. C. UF. CF. N. R. G. T. TF. E. D. L

Fixing pitch and distance between lugs (mm)

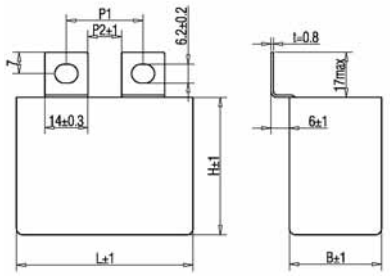

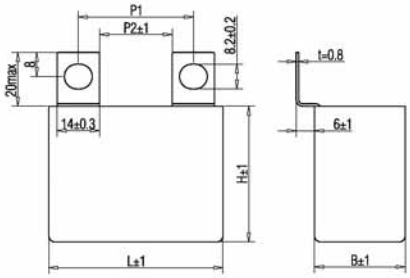

L	Style **B** Output : M6			
	P2	P1	P2	P1
42.5	11	23-28	8	20-25
57.5	11	23-28	24	36-41

L	Style **K** Output : M8			
	P2	P1	P2	P1
42.5	11	24-26	8	21-23
57.5	11	24-26	24	37-39

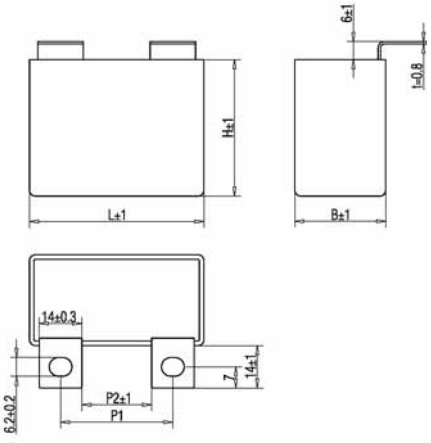

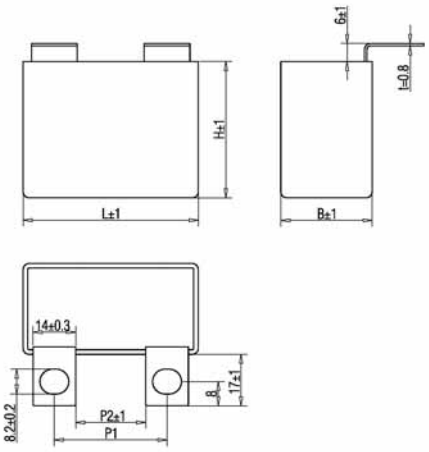

L	Style **U** Output : M6			
	P2	P1	P2	P1
42.5	11	23-28	8	20-25
57.5	11	23-28	24	36-41

L	Style **C** Output : M8			
	P2	P1	P2	P1
42.5	11	24-26	8	21-23
57.5	11	24-26	24	37-39

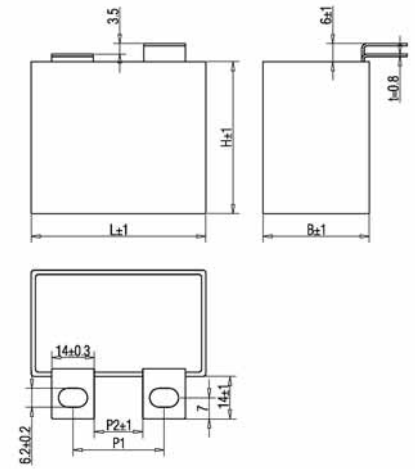

L	Style **UF** Output : M6			
	P2	P1	P2	P1
42.5	11	23-28	8	20-25
57.5	11	23-28	24	36-41

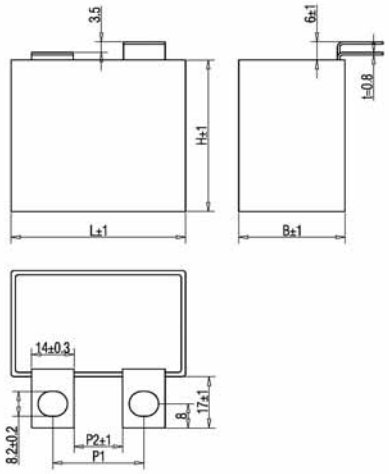

L	Style **CF** Output : M8			
	P2	P1	P2	P1
42.5	11	24-26	8	21-23
57.5	11	24-26	24	37-39

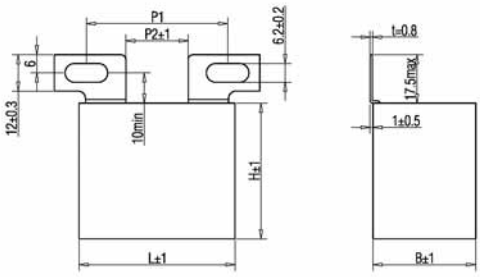

L	Style **R** Output : M6			
	P2	P1	P2	P1
42.5	11	29-39	15	33-45
57.5	11	29-39	15	33-45
			28	46-58

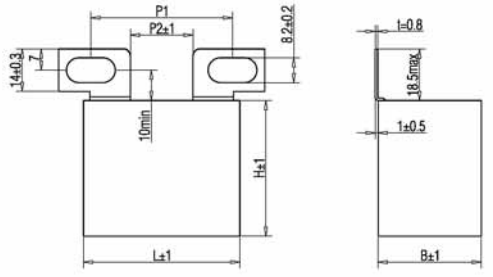

L	Style **G** Output : M8			
	P2	P1	P2	P1
42.5	8	33-42	15	40-49
57.5	15	40-49	24	49-58
			28	53-62

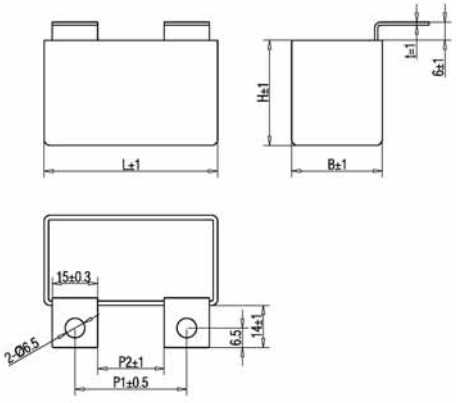

L	Style **N** Output : M8	
	P2	P1
42.5	8	23
57.5	13	28
	22	37

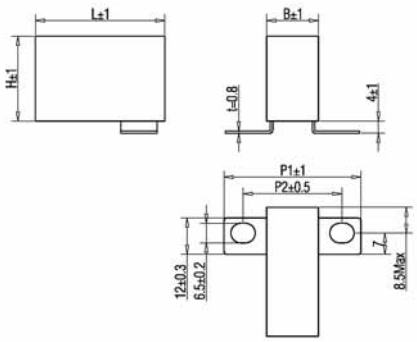

B	Style **T**	Output : M6
	P2	P1
15	30	43
17	32	45

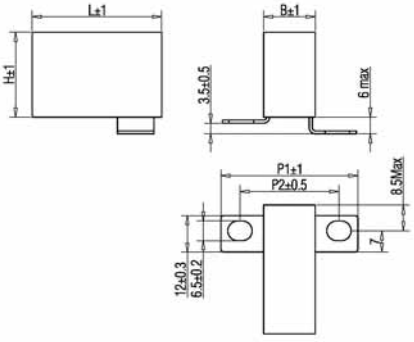

B	Style **TF**	Output : M6
	P2	P1
15	30	43
17	32	45

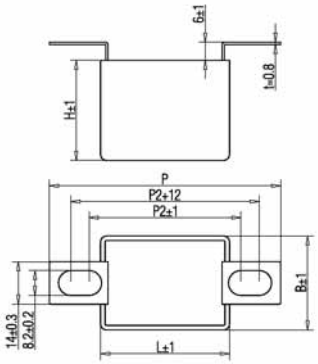

L	Style **E**	Output : M8
	P2	P (max)
42.5	50	82
57.5	65	97

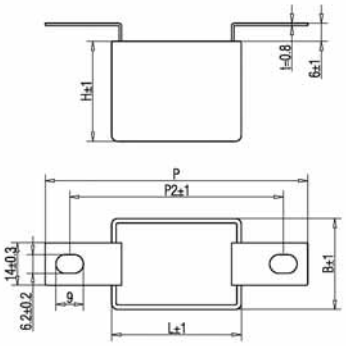

L	Style **D**	Output : M6
	P2	P (max)
42.5	67-73	91
57.5	82-88	106

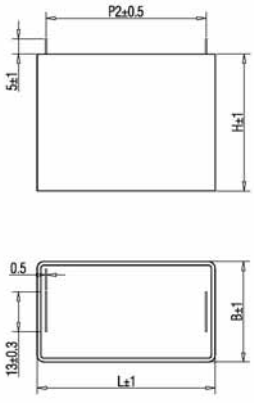

L	Style **L**
	P2
42.5	37.5
57.5	52.5